DRIVE PRODUCTS

FILTER CATALOGUE

TABLE OF CONTENTS

FILTRATION

	PAGE
Suction Strainer	1
Tank Mounted Series	2
Spin on Style Filter Kits	3
Filter - Return Spin-on Head	4 - 5
Filter - Spin-on Elements	6 - 8
Filter - Tank Mounted - JFR	9 - 10
Pressure Filter	11-12

RESERVOIR ACCESSORIES

Level Gauge and Eyeball Gauge	13
Thread On Breather/Filler	14
Bayonet Air Breather/Filler	15
Return Diffusers	16
Weld Flanges	17
Immersion Thermostats and Low Oil Sensors	18

WHY DO I NEED FILTRATION IN MY SYSTEM?

Do you want to increase the life of your hydraulic system? Do you want to decrease your downtime? Do you want to decrease repair costs?

An easy and relatively inexpensive way to accomplish these things is with proper filtration for your hydraulic system. Contamination is the main cause of failures in hydraulic systems. Component failures can lead to expensive repair bills as well as costly downtime of your equipment. Protection of your system components; pumps, valves, cylinders and motors, can be accomplished with proper filtration. Filters can be utilized in different areas of the hydraulic system. Suction strainers and filters can be installed between the reservoir and the pump. Pressure filters are normally located between the pump and control valve or motor. And return line filters, the most common filter in mobile hydraulic systems, are installed at the return port of the reservoir. All have their own benefits to hydraulic systems but it must be determined what the best choice for your system is, as they all vary in cost. For example, pressure filters are generally more expensive than other filters but are normally installed to prevent contaminants from entering intricate and more complex load sense control valves normally found in high pressure piston hydraulic systems.

Filters capture particles in the hydraulic system that can come from but not limited to, environmental conditions such as plugged or damaged reservoir breathers, replacement of hydraulic hoses or components, normal component wear, and even impurities in new hydraulic fluids. Hydraulic components have internal parts that rely on hydraulic fluid to prevent contact between rotating and non-rotating items. Fluid contaminants can be caught between these components resulting in damage to either or both parts making repair, or in most cases, replacement of the component necessary. When properly selected for the flow rate of the system and micron rating desired, and properly maintained, hydraulic filters can remove the majority of these harmful contaminants thus becoming an important component to the longevity, protection and performance of your system.

FILTRATION

SUCTION STRAINER

- Reusable SS 100 MESH/149 Micron STD.
- Aluminum Die Cast Nut
- Steel Cap/Support Tube
- Continuous Epoxy Bond
- Max. Working Temp 80° C.
- Suitable for Hydraulic/Mineral Oil
- 3 PSI Bypass

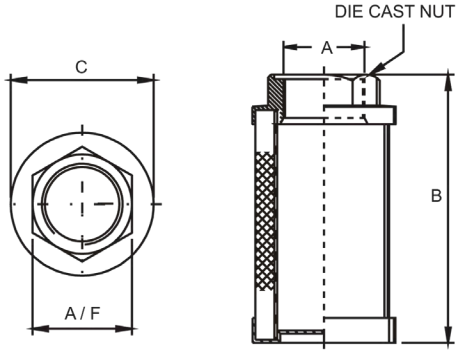

MODEL NO	FLOW (LPM) GPM	THREAD IN NPT A	OVERALL LENGTH B (MM)	DIA NUT CAP C (MM)	NUT A/F (MM)	SCREEN AREA (SQ. CMS)	WT KGS
RS-101	(28) 7	3/4	109	64	35	406	0.20
RS-102	(40) 11	1	139	64	46	542	0.20
RS-201	(60) 16	1-¼	139	86	51	929	0.30
RS-202	(80) 21	1-½	168	86	60	1161	0.35
RS-301	(120) 32	1-½	200	86	60	1393	0.40
RS-303	(200) 53	2	260	100	70	2032	0.60
RS-401	(300) 79	2-½	211	150	90	2787	0.85
RS-403	(400) 106	3	272	150	100	3677	1.00

MODEL CODE: ASSEMBLY

RS	- 301	- 150	- N
SERIES	**STRAINER DIMENSIONS**	**PORT SIZE**	**THREAD STYLE**
RS	101 = (6.6 US GPM) 3/4" Port 149 Micron	075 = 3/4"	NPT
	102 = (13 US GPM) 1" Port 149 Micron	100 = 1"	
	201 = (23 US GPM) 1-¼" Port 149 Micron	125 = 1-¼"	
	202 = (32 US GPM) 1-½" Port 149 Micron	150 = 1-½"	
	301 = (32 US GPM) 1-½" Port 149 Micron	200 = 2"	
	303 = (53 US GPM) 2" Port 149 Micron	250 = 2-½"	
	401 = (79US GPM) 2-½" Port 149 Micron	300 = 3"	
	403 = (100 US GPM) 3" Port 149 Micron		

DIMENSIONS IN MM FOR REFERENCE ONLY

TANK MOUNTED SERIES

- Tank Mounted Reusable Strainer
- Side Wall or Tank Top Mounting
- Flows to 100 GPM (400LPM)
- Stainless Steel Pleated Media
- 100 Mesh (149 Micron) Standard
- Mild Steel / Cast Iron Bushing
- Optional 3 P.S.I. Bypass

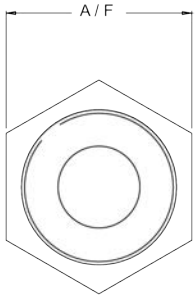

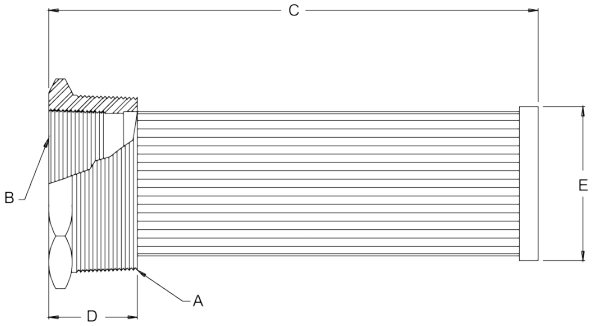

SERIES	BUSHING SIZE DIM. A X DIM. B N.P.T.	LPM/GPM RATING	SCREEN AREA SQ IN.	DIMENSIONS (MM)			
				C	D	E	A/F
TMSS-005	1″ x 1/2″	20/5	35	137	28	28	38
TMSS-010	1-¼″ x 3/4″	40/10	64	190	31	36	46
TMSS-015	1-½″ x 1″	60/15	86	210	33	42	50
TMSS-025	2″ x 1-¼″	100/25	125	254	33	54	65
TMSS-050	3″ x 2″	200/50	260	260	43	78	82
TMSS-100	4″ x 3″	400/100	315	287	46	96	118
TMSS-200	6″ x 4″	800/200	450	316	58	145	144

MODEL CODE: ASSEMBLY

TMSS	- 005	- ***	- 149	- RB3
SERIES	**SIZE**	**NPT THREADS**	**MICRONS**	**OPTIONAL**
TMSS	005	08N - (1″ x ½″)	149 - STD	RB3 - 3 P.S.I. BYPASS VALVE
	010	10N - (1-¼″ x 3/4″)		
	015	12N - (1-½″ x 1″)		
	025	16N - (2″ x 1-¼″)		
	050	24N - (3″ x 2″)		
	100	32N - (4″ x 3″)		
	200	48N - (6″ x 4″)		

DIMENSIONS IN MM FOR REFERENCE ONLY

FILTRATION

SPIN ON STYLE FILTER KITS

PART NUMBER OF KIT	DESCRIPTION	MAX FLOW CAPACITY	MICRON RATING	PORT SIZE & DIMENSIONS	DIMENSIONS	PART IN KIT	DESCRIPTION	QTY
FRPS-N075P10SG-FIL	Single Housing	25 GPM	10	NPT (2) 3/4"	3.67 x 5.67"	FRHS-N075-FIL	Housing	1
	Filter					FRES-S075P10L-FIL	Filter	1
	Gauge					GC610-WHD	Gauge	1
FRPS-N075P10LG-FIL	Single Housing	30 GPM	10	NPT (2) 3/4"	3.67 x 8.00"	FRHS-N075-FIL	Housing	1
	Filter					FRES-S075P10L-FIL	Filter	1
	Gauge					GC610-WHD	Gauge	1
FRPS-N125P10SG-FIL	Single Housing	50 GPM	10	NPT (2) 1-1/4"	5.10 x 6.60"	FRHS-N125-FIL	Housing	1
	Filter					FRES-S125P10S-Fil	Filter	1
	Gauge					GC610-WHD	Gauge	1
FRPS-N125P10LG-FIL	Single Housing	60 GPM	10	NPT (2) 1-1/4"	5.10 x 10.60"	FRHS-N125-FIL	Housing	1
	Filter					FRES-S125P10L-FIL	Filter	1
	Gauge					GC610-WHD	Gauge	1
FRPS-N150P10SG-FIL	Double End to End Housing	100 GPM	10	NPT (2) 1-1/2"	5.10 x 6.60"	FRHS-N150-FIL	Housing	1
	Filter					FRES-S125P10S-FIL (50 GPM)	Filter	2
	Gauge					GC610-WHD	Gauge	1
FRPS-N150P10LG-FIL	Double End To End Housing	120 GPM	10	NPT (2) 1-1/2"	5.10 x 10.60	FRHS-N150-FIL	Housing	1
	Filter					FRES-S125P10L-FIL (60 GPM)	Filter	2
	Gauge					GC610-WHD	Gauge	1
FRPS-C200P10SG-FIL	Side By Side Housing	100 GPM	10	*Combo*	5.10 x 6.60"	FRHS-C200-FIL	Housing	1
	Filter					FRES-S125P10S-FIL (50 GPM)	Filter	2
	Gauge					GC610-WHD	Gauge	1
FRPS-C200P10LG-FIL	Side by Side Housing	120 GPM	10	*Combo*	5.10 x 10.60"	FRHS-C200-FIL	Housing	1
	Filter					FRES-S125P10L-Fil (60 GPM)	Filter	2
	Gauge					GC610-WHD	Gauge	1

**FRHS-C200: Combo Ports 1-1/2" NPT & SAE24-4 BOLT FLANGE*

DIMENSIONS IN MM FOR REFERENCE ONLY

FILTER - RETURN SPIN-ON HEAD

- Disposable Spin On
- Die Cast Aluminum Head
- 4 Sizes Flows to 120 GPM
- Max. Pressure 10 Bar (150 P.S.I.)
- Bypass Standard 1 Bar (Suction 0.2 Bar)
- Max. Temp. 80° C.
- For use with Mineral / Petroleum Based Oils

MODEL	L	D	H	J	X	MOUNTING HOLES		GAUGE PORT		WT KGS
						#	SIZE	#	NPT	
FRHS-N075	95	95	196	248	38	2	1/4 UNC	1	1/8″	1.0
FRHS-N125	132	129	247	331	50	2	5/16 UNC	1	1/8″	2.3
FRHS-N150	142	129	426	612	65	2	3/8 UNC	2	1/8″	3.4
FRHS-C200	286	129	251	350	60	4	3/8 UNC	2	1/8″	5.0

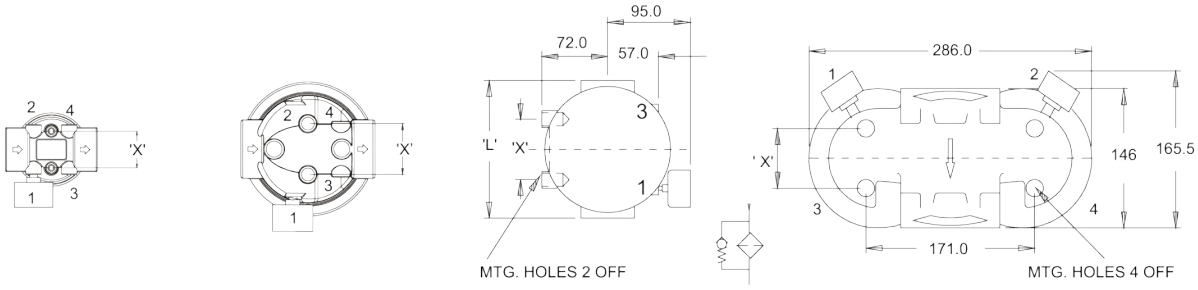

1 & 2 = return gauge positions
3 & 4 = suction gauge positions

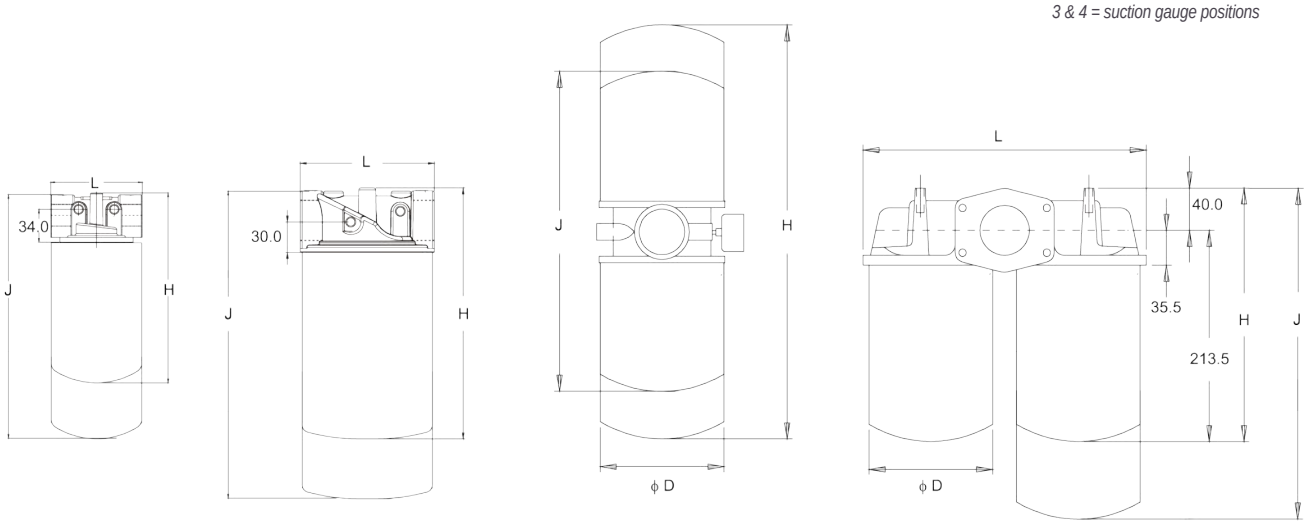

FRHS-N075 FRHS-N125 FRHS-N150 FRHS-C200

DIMENSIONS IN MM FOR REFERENCE ONLY

FILTER - RETURN SPIN-ON HEAD

MODEL CODE: ASSEMBLY

FRHS	- N	- 075
SERIES	**PORT TYPE**	**SIZE**
FRHS	N - NPT Threaded Port	075 - (3/4" NPT) SINGLE ELEMENT
	C - Combo SF & NPT	125 - (1-¼" NPT) SINGLE ELEMENT
		150 - (1-½" NPT) DUAL/OVER-UNDER ELEMENTS
		DUAL SIDE BY SIDE ELEMENTS 200 - (SAE #24 FLANGE & 1-½" NPT COMBO)

MODEL	PORT THREAD 'A'	POST THREAD	C	K	Z	H	WT KGS
FRHS-N075	3/4" NPT	1" UNF x 12	22	67	45	-	0.3
FRHS-N125	1-¼" NPT	DUAL THD	29	96	61	-	1.1
FRHS-N150	1-½" NPT	DUAL THD	-	140	70	-	1.0
FRHS-C200	1-½" NPT THREAD COMBO & SAE #24 FLANGE	DUAL THD	40	107	76	286	2.5

HEAD CASTING

FRHS-N075

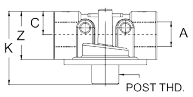

FRHS-N125

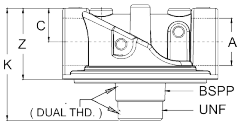

FRHS-N150

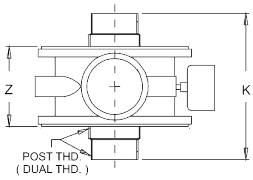

FRHS-C200

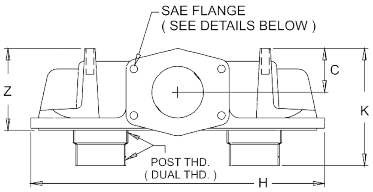

DUAL THREAD (1 ¼" BSPP & 1 ½" - 16 UNF)

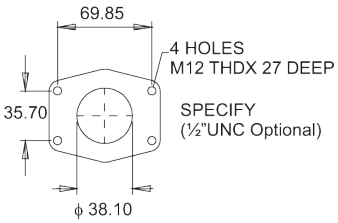

SAE FLANGE DETAILS

DIMENSIONS IN MM FOR REFERENCE ONLY

FILTER - RETURN SPIN-ON ELEMENTS

FRES-S075

- FRES - S075 Series Spin-on Elements are used with the FRHS-N075 Series Spin-on Filters
- NBR (Buna-N®) Seals
- FRES - S075 Series Elements have an inner seal for use with contour Type A Filter heads (FRHS - N075)
- Maximum 10 Bar (150 psi)
- Maximum Pressure differential of 5.5 Bar (80 psi) for any application with no by-pass valve
- -32°C to +100°C (-25°F to 212°F)
- For use with Mineral / Petroleum Based Oils

DIMENSIONS AND ORDERING CODE

	FILTERPAPER				MICROGLASS			WATER ABSORBING
	FRES-S075P10S	FRES-S075P10L	FRES-S075P25S	FRES-S075P25L	FRES-S075M3S	FRES-S075M12S	FRES-S075M25S	FRES-S075R10S
	10µm	10µm	25µm	25µm	3µm	12µm	25µm	10µm water absorb
Max Flow* (GPM)	25	30	30	40	15	20	35	25
DIAMETER	93.2 (3.67)	93.2 (3.67)	93.2 (3.67)	93.2 (3.67)	93.2 (3.67)	93.2 (3.67)	93.2 (3.67)	93.2 (3.67)
LENGTH	147 (5.76)	204 (8.00)	147 (5.76)	204 (8.00)	147 (5.76)	147 (5.76)	147 (5.76)	133 (5.25)
ELEMENT THREAD	1-12 UNF	1-12 UNF	1-12 UNF	1-12 UNF	1-12 UNF	1-12 UNF	1-12 UNF	1-12 UNF

**Recommended only: Based on ISO 3968 (includes clean oil @ 30 cSt viscosity, @100° F/37.8° C)*

( ) DIMENSIONS IN INCHES
DIMENSIONS IN MM FOR REFERENCE ONLY

FILTER - RETURN SPIN-ON ELEMENTS

FRES-S125

- FRES - S125 Series Spin-on Elements are used with the FRHS-C200/-N150/-N125 Series and Spin-on Filters
- NBR (Buna-N®) Seals
- FRES - S125 Series Elements have an outer seal thin and wide style (supplied with element)
- Maximum 10 Bar (150 psi)
- Maximum Pressure differential of 5.5 Bar (80 psi) for any application with no by-pass valve
- -32°C to +100°C (-25°F to 212°F)
- For use with Mineral / Petroleum Based Oils

DIMENSIONS AND ORDERING CODE

	MICROGLASS								
	FRES-S125M1L	FRES-S125M3S	FRES-S125M3L	FRES-S125M6S	FRES-S125M6L	FRES-S125M12S	FRES-S125M12L	FRES-S125M25S	FRES-S125M25L
	1µm	3µm	3µm	6µm	6µm	12µm	12µm	25µm	25µm
MAX FLOW* (GPM)	40	33	60	40	70	50	70	60	80
DIAMETER	128 (5.1)	128 (5.1)	128 (5.1)	128 (5.1)	128 (5.1)	128 (5.1)	128 (5.1)	128 (5.1)	128 (5.1)
LENGTH	270 (10.6)	168 (6.6)	270 (10.6)	168 (6.6)	270 (10.6)	168 (6.6)	270 (10.6)	168 (6.6)	270 (10.6)
ELEMENT THREAD	1 ½-16 UNF	1 ½-16 UNF	1 ½-16 UNF	1 ½-16 UNF	1 ½-16 UNF	1 ½-16 UNF	1 ½-16 UNF	1 ½-16 UNF	1 ½-16 UNF

	FILTERPAPER				STAINLESS WIRE MESH		WATER ABSORBING
	FRES-S125P10S	FRES-S125P10L	FRES-S125P25S	FRES-S125P25L	FRES-S125WM125S	FRES-S125WM125L	FRES-S125R10L
	10µm	10µm	25µm	25µm	125µm	125µm	10µm water absorb
MAX FLOW* (GPM)	50	60	60	70	70	80	50
DIAMETER	128 (5.1)	128 (5.1)	128 (5.1)	128 (5.1)	128 (5.1)	128 (5.1)	128 (5.1)
LENGTH	168 (6.6)	270 (10.6)	168 (6.6)	270 (10.6)	168 (6.6)	270 (10.6)	270 (10.6)
ELEMENT THREAD	1 ½-16 UNF	1 ½-16 UNF	1 ½-16 UNF	1 ½-16 UNF	1 ½-16 UNF	1 ½-16 UNF	1 ½-16 UNF

*Recommended only: Based on ISO 3968 (includes clean oil @ 30 cSt viscosity, @100° F/37.8° C)

( ) DIMENSIONS IN INCHES
DIMENSIONS IN MM FOR REFERENCE ONLY

FILTER - RETURN SPIN-ON ELEMENTS

FRES-B125

(HIGH VOLUME FILTER)

- FRES - B125 Series Spin-on Elements are used with the FRHS-C200/-N150/-N125/ Series Spin-on Filters with BSP 1-1/4 Threaded Posts
- NBR (Buna-N®) Seals
- Maximum 12 Bar (174 psi)
- Maximum Pressure differential of 5.5 Bar (80 psi) for any application with no by-pass valve
- -32°C to +100°C (-25°F to 212°F)
- For use with Mineral / Petroleum Based Oils

DIMENSIONS AND ORDERING CODE

	• FILTERPAPER				• MICROGLASS		• WIRE MESH		• BRASS MESH	
	FRES-B125P10S	FRES-B125P10L	FRES-B125P25S	FRES-B125P25L	FRES-B125M10S	FRES-B125M10L	FRES-B125W60S	FRES-B125W60L	FRES-B12W125S	FRES-B125W125L
	10µm	10µm	25µm	25µm	10µm	10µm	60µm	60µm	125µm	125µm
MAX FLOW* (GPM)	50	60	60	80	50	60	65	75	70	80
DIAMETER	132 (5.2)	132 (5.2)	132 (5.2)	132 (5.2)	132 (5.2)	132 (5.2)	132 (5.2)	132 (5.2)	132 (5.2)	132 (5,2)
LENGTH	180 (7.1)	226 (8.9)	180 (7.1)	226 (8.9)	180 (7.1)	226 (8.9)	180 (7.1)	226 (8.9)	180 (7.1)	226 (8,9)
ELEMENT THREAD BSP THREAD	G 1-¼	G 1-¼	G 1-¼	G 1-¼	G 1-¼	G 1-¼	G 1-¼	G 1-¼	G 1-¼	G 1-¼

**Recommended only: Based on ISO 3968 (includes clean oil @ 30 cSt viscosity, @100° F/37.8° C)*

( ) DIMENSIONS IN INCHES
DIMENSIONS IN MM FOR REFERENCE ONLY

FILTRATION

FILTER-TANK MOUNTED - JFR

- Direct Tank Mounting - Flow in - to out
- 6 Sizes - Flows to 425 LPM / 112 GPM
- By Pass 1 Bar (15 PSI) Standard
- Aluminium Die Cast Housing
- Max Temp 80°C
- Element Kit Optional
- Working Pressure 10 Bar / Test Pressure 15 Bar / Burst Pressure 20 Bar

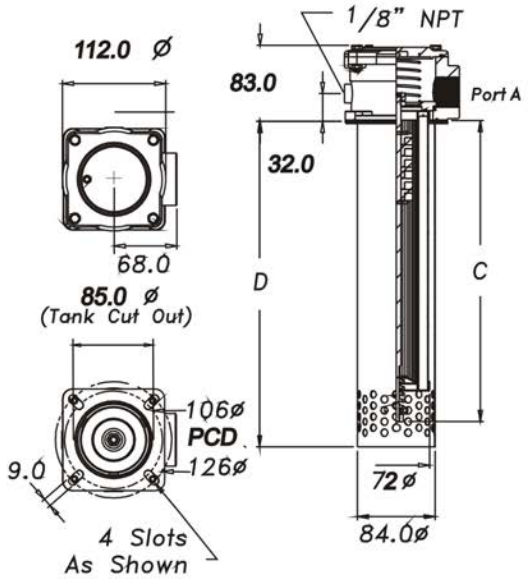

JFR1

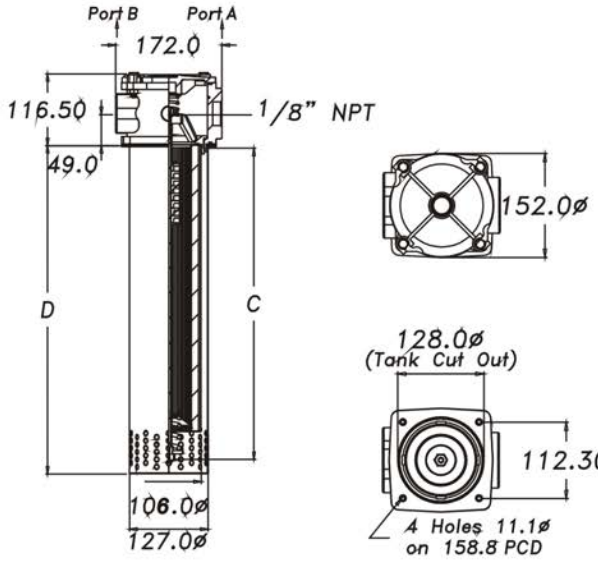

JFR2

MODEL NO	C	D	MAX FLOW LPM / GPM
JFR1 - 06N - L1	180	200	90 / 24
JFR1 - 08N - L2	230	250	120 / 32
JFR1 - 10N - L3	330	350	150 / 40

MODEL NO	C	D	MAX FLOW LPM / GPM
JFR2 - 10N - L4	235	255	200 / 53
JFR2 - 12N - L5	325	320	275 / 73
JFR2 - 16N - L6	515	525	425 / 112

DIMENSIONS IN MM FOR REFERENCE ONLY

FILTER - TANK IMMERSED - JFR

MODEL CODE : ASSEMBLY

JFR	SIZE	PORT B (STANDARD)	PORT B (STANDARD)	- ELEMENT		FEATURE		
SERIES	GROUP	SIZE	SIZE	LENGTH	FILLRATION MICRON	OPTIONAL BYPASS SET-TING	DIFFUSER TUBE	MAGNET BANK
	1	06 B - 3/4" BSPP 06 N - 3/4" NPT 12 S - 1-1/16" UNF-12		L1	P10-10 NOM	R3-1barStd (Omit if STD)	D	M
		08 B - 1" BSPP 08 N - 1" NPT 16 S - 1-5/16" UNF-12		L2				
		10 B - 1-1/4" BSPP 10 N - 1-1/4" NPT 20 S - 1-5/8" UNF-12		L3	P25-25 NOM			
	2	10 B - 1-1/4" BSPP 10 N - 1-1/4" NPT 20 S - 1-5/8" UNF-12	K - 1-1/2" SAE FLANGE & 1-1/4" NPT T - 1-1/2" SAE FLANGE & 1-5/8"-12UN	L4	A10-10 ABS	R4-1.7bar (Optional)		
		12 B - 1-1/2" BSPP 12 N - 1-1/2" NPT 24 S - 1-7/8" UNF-12		L5	A25-25 ABS			
		16 B - 2" BSPP 16 N - 2" NPT 32 S - 2-1/2" UNF-12		L6				

Indicator : Optional (to be ordered separately)
GR V isual Return ER Elec. Return
Element: P10 / P25 Was 010 / 025

Optional / special feature - omit if not required
Consult Factory For Tapped Holes For Cover Bolts

MODEL CODE : ELEMENT

JFE	- L1	- 010
SERIES	SIZE	FILTRATION M MICRON
JFE		P10 - 10 µ NOM
	L1	
	L2	P10 - 25 µ NOM
	L3	
	L4	A10 - 10 µ NOM
	L5	
	L6	A25 - 10 µ NOM

Optional / Special Feature - OMIT If Not Requires

ELEMENT DETAILS

SIZE	DIA	HT	AREA SQCM	
			P-10/25	A-10/25
JFE-L1	72	150	1800	1225
JFE-L2	72	200	2600	1700
JFE-L3	72	300	3800	2625
JFE-L4	106	190	3200	2700
JFE-L5	106	280	4600	3700
JFE-L6	106	470	6800	5400

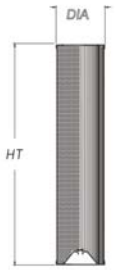

DIMENSIONS IN MM FOR REFERENCE ONLY

FILTRATION

PRESSURE FILTER

SERIES HP3.170-450 6000 PSI

TYPE	CONNEC-TION	A	B	WEIGHT LBS.	VOLUME TANK
HP3.170	-16 SAE	12.55	11.61	29	.18 Gal
	-20 SAE				
	-24 SAE				
	SAE 1 ½"				
HP3.240	-16 SAE	14.48	13.58	31	.23 Gal
	-20 SAE				
	-24 SAE				
	SAE 1 ½"				
HP3.360	-16 SAE	17.67	16.73	35	.31 Gal
	-20 SAE				
	-24 SAE				
	SAE 1 ½"				
HP3.450	-16 SAE	21.81	20.86	42	.42 Gal
	-20 SAE				
	-24 SAE				
	SAE 1 ½"				

1) Connection for the potential equalization, only for application in the explosive area.

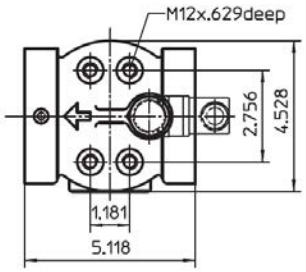

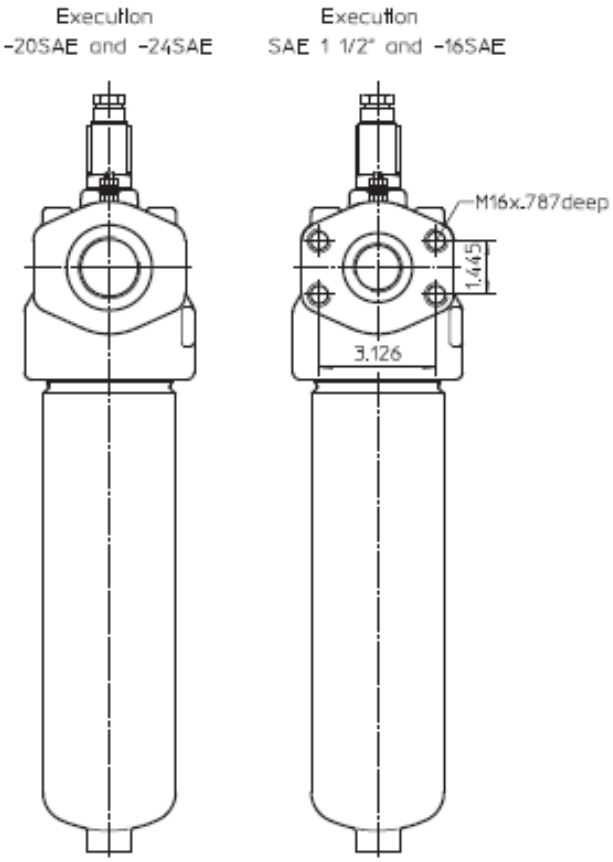

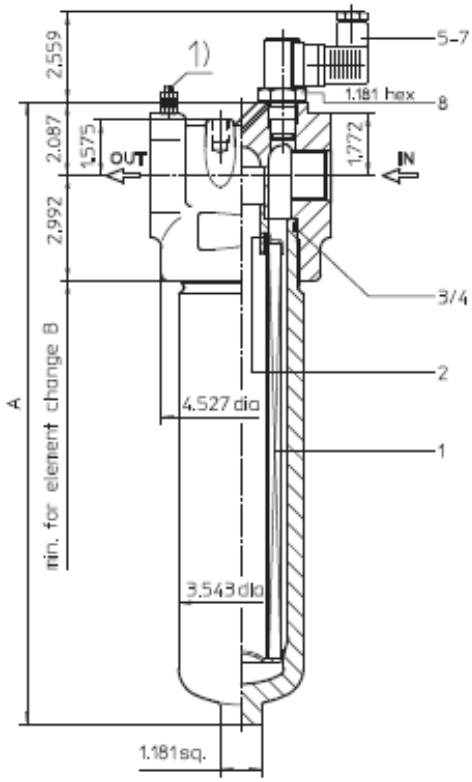

Dimensions: inches

Designs and performance values are subject to change.

DIMENSIONS IN MM FOR REFERENCE ONLY

PRESSURE FILTER

SERIES HP3.170-450 6000 PSI

Description:

Pressure filter series HP3.170-450 have a working pressure up to 6000 PSI. Pressure peaks can be absorbed with a sufficient safety margin. The HP3-filter is in-line mounted.

The filter element consists of star-shaped, pleated filter material, which is supported on the inside by a perforated core tube and is bounded to the end caps with a high-quality adhesive. The flow direction is from outside to inside. Filter elements are available down to 5 ↔m(C). Finer filtration is available upon request.

For cleaning the stainless steel mesh element (see special leaflets 21070-4 and 39448-4) or changing the filter element, remove the filter bowl and take out the element. The mesh elements are not guaranteed to maintain 100% performance after cleaning.

Eaton filter elements are known for high intrinsic stability and an excellent filtration capability, a high dirt-retaining capacity and a long service life.

Eaton filter can be used for petroleum-based fluids, HW emulsions, water glycols, most synthetic fluids and lubrication fluids. Consult factory for specific fluid applications.

Eaton filter elements are available up to a pressure resistance of ←p 2320 PSI and a rupture strength of ←p 3625 PSI.

The internal valves are integrated into the centering pivot for the filter element. After reaching the opening pressure the by-pass valve causes that an unfiltered partial flow passes the filter.

The reversing valve provides another level of protection for the filter element. The reverse flow will not be filtered.

1. TYPE INDEX

1.1. COMPLETE FILTER: (ORDERING EXAMPLE)

HP3.	170.	10VG.	HR.	E.	P.	-.	UG.	5.	-.	-.	AE
1	2	3	4	5	6	7	8	9	10	11	12

1 — **Series:**
HP3 = Pressure Filter

2 — **Normal Size:** 170, 240, 360, 450

3 — **Filter-material:**
80G, 40G, 25G, stainless steel wire mesh
25VG, 16VG, 10VG, 6VG, 3VG microglass

4 — **Filter element collapse rating:**
30 = ←p 435 PSI
HR = ←p 2320 PSI (rupture strength ←p 3625 PSI)

5 — **Filter Element Design:**
E = Single-end open

6 — **Sealing Material:**
P = Nitrile (NBR)
V = Viton (FPM)

7 — **Filter Element Specification:**
- = Standard
VA = Stainless Steel
IS06 = For HFC applications, see sheet-no. 31601

8 — **Process Connection:**
UG = Thread According
FS = SAE-Flange 6000 PSI

9 — **Process Connection Size:**
5 = -16 SAE
6 = -20 SAE
7 = -24 SAE or SAE 1 1/2"

10 — **Filter Housing Specification:**
- = Standard
IS06 = For HFC Applications, See Sheet-no. 31605

11 — **INTERNAL VALVE:**
- = Without
S1 = With by-pass valve ←p 51 PSI
S2 = With by-pass Valve ←p 102 PSI
R = Reversing valve, Q ≤ 55.75 GPM

12 — **Clogging Indicator or Clogging Sensor:**
- = Without
AOR = Visual, see sheet-no. 1606
AOC = Visual, see sheet-no. 1606
AE = Visual-Electric, see sheet-no. 1615
VS5 = Electronic, see sheet-no. 1619

To add an indicator/sensor to your filter, use the corresponding indicator data sheet to find the indicator details and add them to the filter assembly model code.

1.2. Filter Element: (ORDERING EXAMPLE)

01E.	90.	10VG.	HR.	E.	P.	-
1	2	3	4	5	6	7

1 — **Series:**
01E. = Filter element according to company standard

2 — **Nominal Size:** 170, 240, 360, 450

3-7 — See type index-complete filter

DIMENSIONS IN MM FOR REFERENCE ONLY

RESERVOIR ACCESSORIES

LEVEL GAUGE & EYE BALL GAUGE

LEVEL GAUGE

- 'O' Ring Type Construction/Sturdy Die Cast Cover
- 3 Sizes 3", 5" & 10" Between Bolt Centres
- For Non-Pressurised Tanks Only
- Can be mounted on tapped holes
- Suitable for Mineral/Petroleum Based Oils
- Maximum temperature 80°C

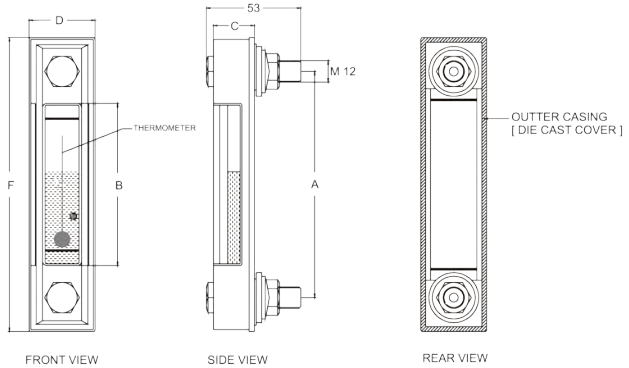

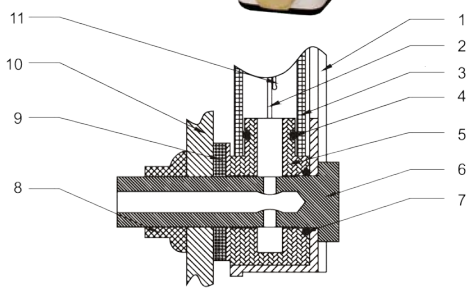

MODEL	A	B	C	D	F	WT KGS.
ROLG-03	76.2	34	23	35	111	0.17
ROLG-05	127	89	23	35	162	0.19
ROLG-10	254	89	23	35	289	0.40

1 COVER
2 INDICATOR
3 TUBE
4 'O' RING (13.8 I.D. X 2.4 C.S.D.)
5 END PIECE
6 BOLT
7 'O' RING
8 NUT (FLANGED & SERRATED)
9 WASHER
10 TANK WALL
11 THERMOMETER (Optional)

MODEL CODE: ASSEMBLY

ROLG	- 05	- T	- UNC
SERIES	SIZE (INCH)	FEATURE	FEATURE
ROLG	03 - 3" CENTER BOLT DIMENSION	T - THERMOMETER	M12 (M12 x 1.75 BOLT)
	05- 5" CENTER BOLT DIMENSION		M10 (M10 x 1.50 BOLT)
	10 - 10" CENTER BOLT DIMENSION		UNC (1/2" - 13 UNC)

EYE BALL GAUGE

ORDERING INFORMATION			
PART NO.	DESCRIPTION	WEIGHT	CAT.
HSG075	3/4" NPT Slight Level Gauge	0.10 lbs.	630 (N)
HSG100	1" NPT Slight Level Gauge	0.20 lbs	630 (N)

DIMENSIONS IN MM FOR REFERENCE ONLY

RESERVOIR ACCESSORIES

THREAD ON BREATHER/FILLER

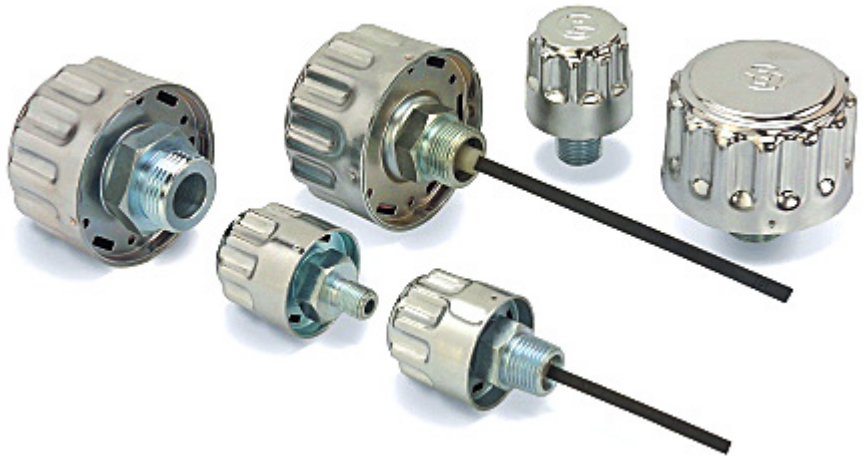

THREADED TYPE

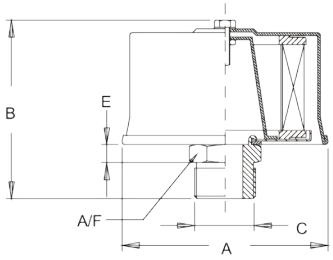

TB - 35

TB - 65

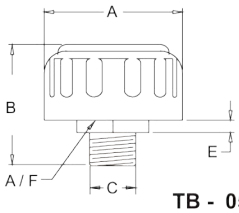

TB - 05

TB - 25

P - FEATURE

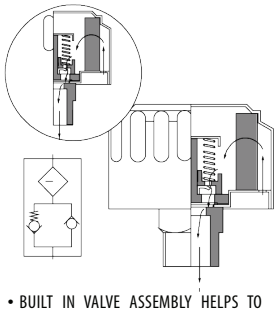

MODEL	DISPLACEMENT	RATING MICRON	DIMENSIONS					
			A	B	C STD IN NPT	E	A/F	WT KGS
TOBF - 05	150 LPM	40	45	63	1/4"	8	25	0.13
TOBF - 05-10	90 LPM	10						
TOBF - 25	720 LPM	40	77	75	3/4"	10	30	0.25
TOBF - 25-10	400 LPM	10						
TOBF - 35	1000 LPM	10	110	138	1-½"	12	55	0.40
TOBF - 65	2000 LPM	10	145	145	2"	15	65	0.55
TOBF - 165	4000 LPM	10	185	195	2-½"	15	80	1.30

- BUILT IN VALVE ASSEMBLY HELPS TO MAINTAIN PRESET PRESSURE (5 PSI) IN THE TANK.
- ALLOWS FREE FLOW OF AIR INTO THE TANK IF PRESSURE FALLS BELOW ATMOSPHERIC.
- IF PRESSURE INSIDE TANK INCREASES VALVE RELEASES AT PRESET PRESSURE (5 PSI)
- DISPLACED AIR IS FILTERED AND CLEAN

MODEL CODE: ASSEMBLY

TOBF	- 05	- 10	- ***	- P
SERIES	CAPACITY CFM	FILTRATION µ MICRONS	THREAD OPTION	FEATURE
TOBF	05	40 (STANDARD) 10 (OPTIONAL)	02N (¼" NPT) 03N (⅜ NPT) 04N (½" NPT)	P - (PRESSURIZED 5 PSI) DS - DIP STICK SG - SPLASH GUARD
	25		06N (¾" NPT) 08N (1" NPT)	
	35	10 (STANDARD)	10N (1 ¼" NPT)	
	65	10 (STANDARD)	12N (1 ½" NPT) 16N (2" NPT) 20N (2 ½" NPT)	
	165			

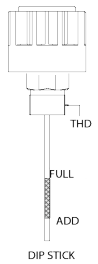

DIMENSIONS IN MM FOR REFERENCE ONLY

RESERVOIR ACCESSORIES

BAYONET AIR BREATHER/FILLER

- Chrome Plated Steel Cap - Vents underneath
- Filtration 40 Microns Standard/Optional 10 Microns
- Air flows to 25 CFM (750 LPM)
- Rugged Cast Aluminum Housing (for SM model)
- Metal Strainer - Standard
- Hardware includes gasket
- Breather/Filler with Optional Bypass model BABFP-25

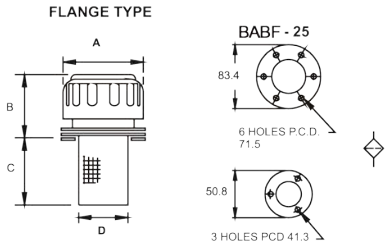

MODEL	DISPLACEMENT	RATING MI-CRONS	A	B	C*	D	WT KGS
BABF - 05	150 LPM	40	45	49	65	28	0.10
BABF - 05-10	90 LPM	10					
BABF - 25	720 LPM	40	77	62	91	48	0.25
BABF - 25-10	400 LPM	10	77	62	91	48	0.25
BABFW - 25	720 LPM	40	77	62	91	30	0.25
BABF - 25-HN	720 LPM	40	77	122	91	48	0.40
BABFW - 25-HN	720 LPM	40	77	122	91	30	0.40
BABFC - 25	720 LPM	40	77	50	-	-	0.21

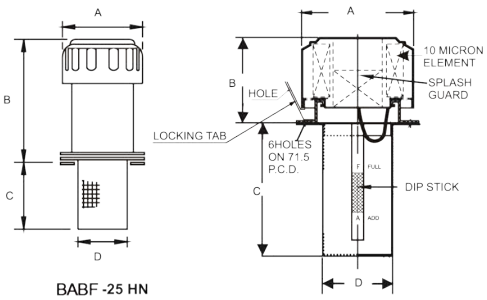

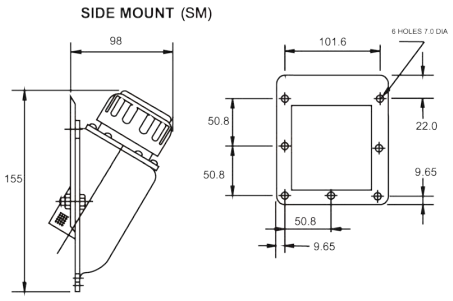

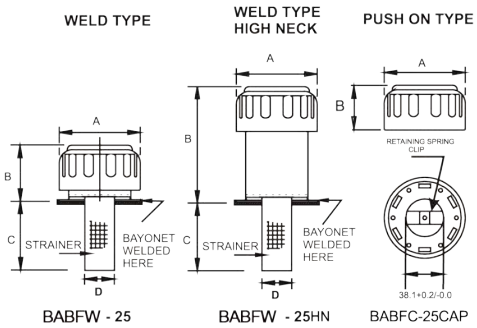

PART NUMBER	DESCRIPTION	WEIGHT	CAT.
BEC061A	Push-In Type Breather Cap for 1½ O.D. Tube, Chrome	0.24 lbs	635 (N)

MODEL CODE: ASSEMBLY

BABF*	- 25	- * *	- SM	- * *	- * *
SERIES	CAPACITY CFM	FILTRATION µ MICRONS	FEATURE OPTIONAL	STRAINER OPTIONAL	FEATURE SPECIAL
BABF-05	05	40 STD 10 OPT		STD	DS - DIP STICK
BABF - 25	25		SM - SIDE MOUNT HN - HIGH NECK	L4 - STD L6 - 152mm L8 - 203mm	LT - LOCKING TAB DS - DIPSTICK SG - SPLASH GUARD
BABFC - 25					
BABFW - 25					

DIMENSIONS IN MM FOR REFERENCE ONLY

RETURN DIFFUSERS

- Used in Return Line
- Reduces discharge velocity in two stages
- Minimizes turbulence and foaming - thereby reduces aeration/noise level
- Must be below oil level
- Can eliminate Baffle Plate in Tank
- Consult factory for optional Threads

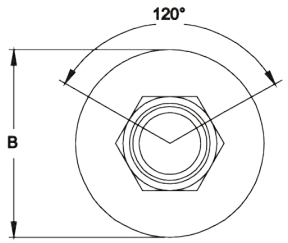

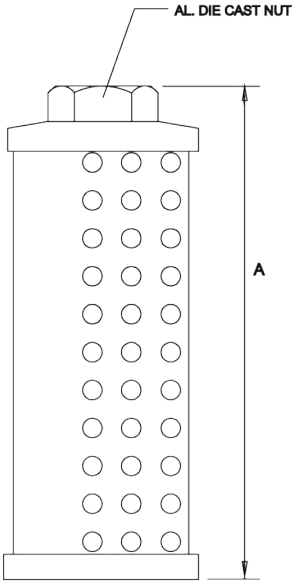

MODEL	PORT IN. NPT	A	B	RATED CAPACITY LPM (GPM)	WT KGS
TMRD-050-N-FIL	3/4″	120	64	50 (13)	0.34
TMRD-100-N-FIL	1″	125	86	100 (26)	0.38
TMRD-200-N-FIL	1 - ¼″	160	86	200 (53)	0.50
TMRD-300-N-FIL	1 - ½″	190	86	300 (79)	0.70
TMRD-400-N-FIL	2″	190	100	400 (106)	0.80
TMRD-500-N-FIL	2 - ½″	200	150	500 (132)	0.90
TMRD-600-N-FIL	3″	250	150	600 (158)	1.00

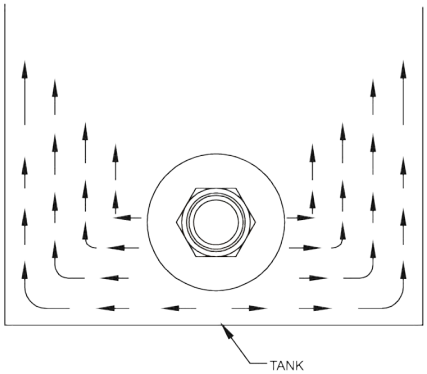

PART NUMBER	DESCRIPTION	PORT TYPE & SIZE	DIMENSIONS
HD200125	Screw in Diffuser	2" x 1 ¼" NPT	8.875" Long

DIMENSIONS IN MM FOR REFERENCE ONLY

RESERVOIR ACCESSORIES

WELD FLANGES

- Steel Construction
- Black Phosphate Finish (Suitable for Welding)
- Flanged design minimizes warpage
- 'O' Ring Port ensures leak protection

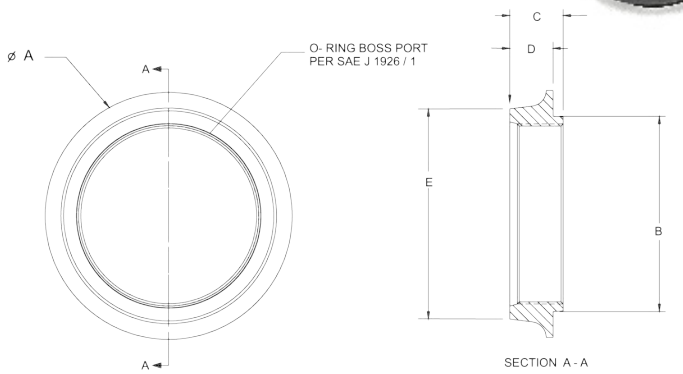

FORGED STEEL WELDING FLANGE

PART NUMBER	PORTING	A (O.D.)	B (PILOT)
TWF-01N-FIL	1/8" NPT	1.3125"	1.125"
TWF-02N-FIL	1/4" NPT	1.3125"	1.125"
TWF-03N-FIL	3/8" NPT	1.3125"	1.125"
TWF-04N-FIL	1/2" NPT	1.625"	1.125"
TWF-04U-FIL	7/16" - 20 UNF	1.50"	.93"
TWF-05U-FIL	1/2" - 20 UNF	1.50"	.93"
TWF-06N-FIL	3/4" NPT	1.9375"	1.375"
TWF-06U-FIL	9/16" - 18 UNF	1.50"	.93"
TWF-08N-FIL	1" NPT	2.25"	1.687"
TWF-08U-FIL	3/4" - 16 UNF	1.50"	.93"
TWF-10N-FIL	1 ¼" NPT	2.5625"	2.00"
TWF-10U-FIL	7/8" - 14 UNF	2.13"	1.38"
TWF-12N-FIL	1 ½" NPT	2.8125"	2.25"
TWF-12U-FIL	1 1/16" -12 UNF	2.13"	1.38"
TWF-14U-FIL	1 3/16" -12 UNF	2.38"	1.66"
TWF-16N-FIL	2" NPT	3.375"	2.625"
TWF-16U-FIL	1 5/16" - 12 UNF	2.38"	1.66"
TWF-20N-FIL	2 ½" NPT	4.0625"	3.156"
TWF-20U-FIL	1 5/8" - 12 UNF	2.69"	2.00"
TWF-22N-FIL	3" NPT	4.625"	3.656"
TWF-24U-FIL	1 3/8 - 12 UNF	3.00"	2.25"
TWF-32N-FIL	4" NPT	5.1825"	4.719"
TWF-32U-FIL	2 ½" - 12 UNF	3.50"	2.63"
TWF-48U-FIL	3 3/8 - 12 UNF	4.63"	3.66"

ALUMINUM STAMPED WELDING FLANGE

PART NUMBER	PORTING	A (O.D.)	B (PILOT)
ATWF-02N-FIL	1/4" NPT	1.78"	.600"
ATWF-03N-FIL	3/8" NPT	1.78"	.755"
ATWF-04N-FIL	1/2" NPT	1.78"	.930"
ATWF-06N-FIL	3/4" NPT	2.35"	1.135"
ATWF-08N-FIL	1" NPT	2.36"	1.385"
ATWF-10N-FIL	1 ¼" NPT	2.868"	1.74"
ATWF-12N-FIL	1½" NPT	3.25"	1.75"
ATWF-16N-FIL	2" NPT	3.81"	2.22"

DIMENSIONS IN MM FOR REFERENCE ONLY

IMMERSION THERMOSTATS & LOW OIL SENSORS

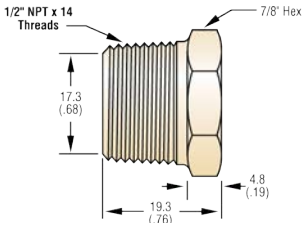

Syle 137 1000p.s.i.

IMMERSION THERMOSTATS

Immersion thermostats are thermally sensitive bi-metallic switches housed in a rugged brass or stainless steel case. The switches are manufactured to either make or break an electrical circuit at a factory pre-set temperature and they reset automatically on cooling.

HIGH CONTACT CAPACITY

TCDR-137-A1-85C = Temperature Sensor : 185°F ½" NPT
- Available Temperature Range: 5°C to 177°C
- Standard Set Temperature Tolerance: ± 6°C
- Standard Differential: 11°C ± 6°C

TCDR-137-A1-38C = Temperature Sensor : 100°F ½" NPT
TCDR-137-A1-77C = Temperature Sensor : 170°F ½" NPT

LOW OIL SENSORS

ELS-1150 - 1/2 - DSW12 - SHO

Low Oil Sensor 12 VDC 1/2" NPT

PC1200-0121-MIR

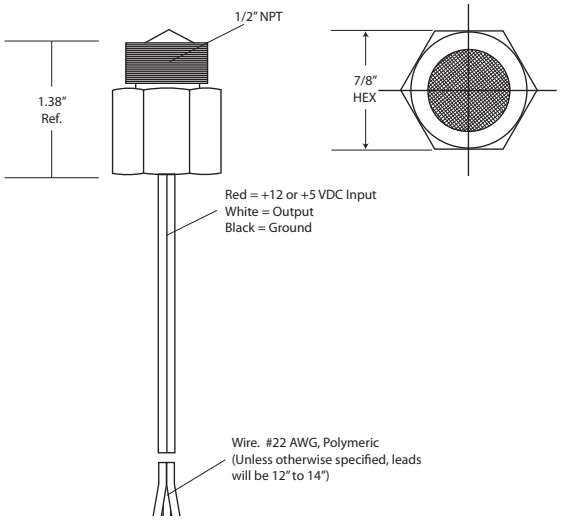

TYPICAL WIRING DIAGRAM

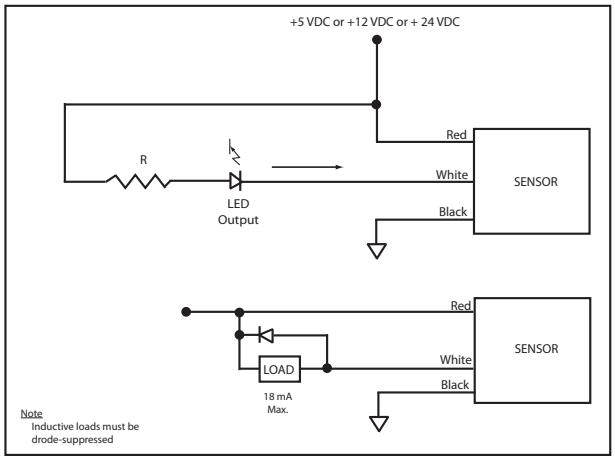

PART NUMBER	DESCRIPTION	WEIGHT	CAT.
E22	Oil Level Sensor Kit	0.61 lbs.	630 (N)

SPECIFICATIONS

- Materials:
  - ↳ Housing …… Nickel-plated Carbon Steel or 316SS
  - ↳ Prism …… Fused Glass
- Operating Pressure: …….. 0 to 2500 psig, Max.
- Operating Temperature: …… -40°F to 212°F (-40°C to 100°C)

DIMENSIONS IN MM FOR REFERENCE ONLY

NOTES

NOTES

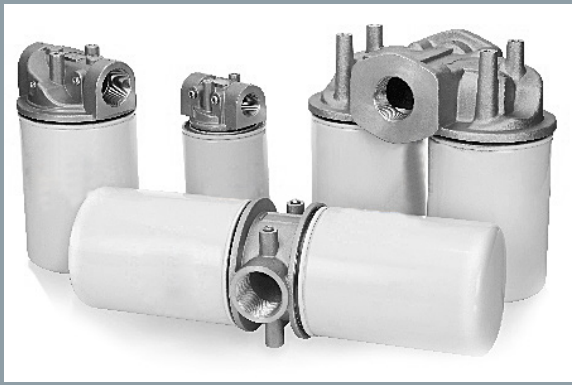

UPFITTING, SERVICE AND DISTRIBUTION PHONE NUMBERS

/ **Toronto (H.O.)**	**TEL** 905.564.5800	/ **Morden**	**TEL** 204.201.1197
/ **Etobicoke**	**TEL** 416.619.1573	/ **Winnipeg**	**TEL** 204.201.1036
/ **Tillsonburg**	**TEL** 519.842.7200	/ **Regina**	**TEL** 306.359.3677
/ **Windsor**	**TEL** 519.727.4398	/ **Edmonton**	**TEL** 780.960.6826
/ **Ottawa**	**TEL** 613.691.4196	/ **Calgary**	**TEL** 403.720.8033
/ **Montréal**	**TEL** 514.856.0407	/ **Vancouver**	**TEL** 604.888.4464
/ **Laval**	**TEL** 514.519.0367	/ **Elkhorn**	**TEL** 262.723.7914
/ **Halifax**	**TEL** 902.468.8288		
/ **Moncton**	**TEL** 506.388.3465		
/ **Mount Pearl**	**TEL** 709.753.0984		

DRIVE PRODUCTS
SOLUTIONS / PARTNERS / SERVICES

POWER BEYOND

Intertek

ISO Certified by an Accredited Registrar • National Safety Mark Approval • ©Drive Products 2022
Drive Products reserves the right to make changes in specifications, packages, or to discontinue options without notice at any time.